Type-C PD PHY STUSB4500

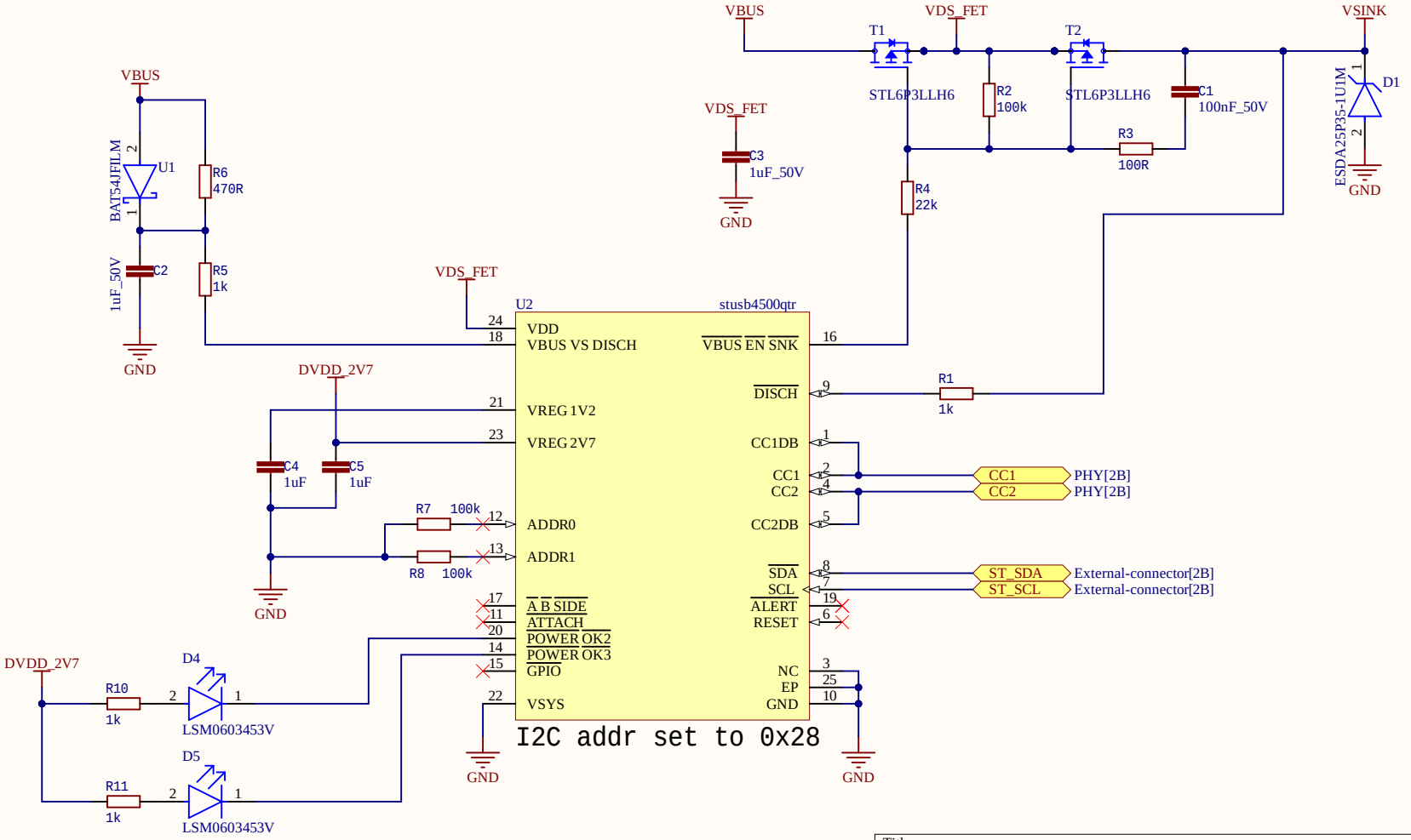

Title		
Size A	Number	Revision
Date: 3/29/2026		Sheet of
File: STUSB.SchDoc		Drawn By:

Type-C Physical Connector & Protection

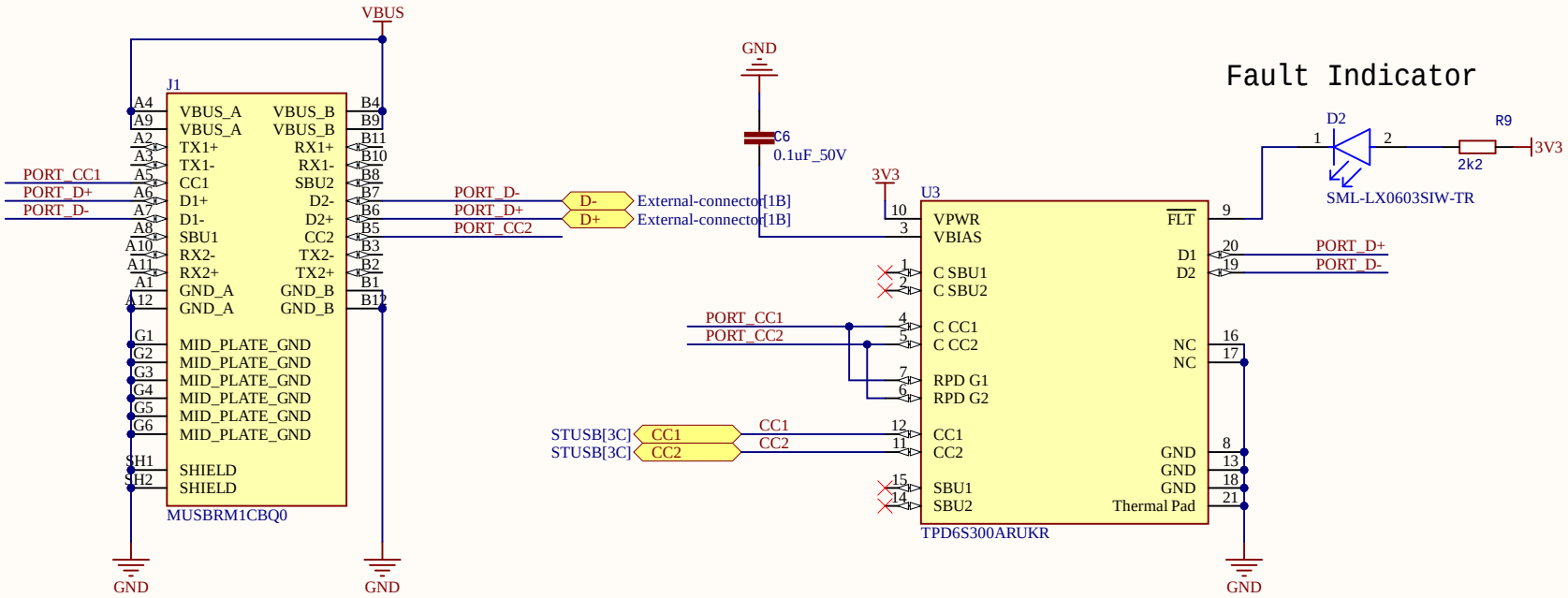

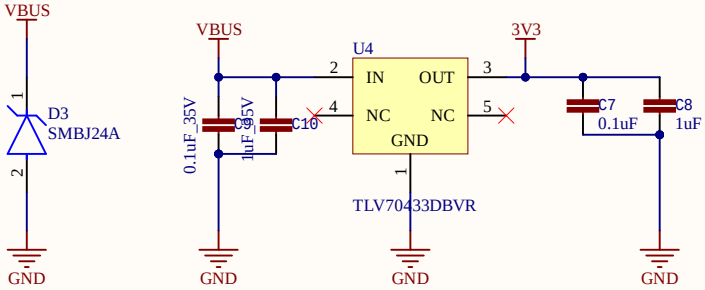

1. C_CCx short to RPD_Gx to enable dead battery support on CCx.

Title		
Size A	Number	Revision
Date: 3/29/2026		Sheet of
File: PHY.SchDoc		Drawn By:

External Connector

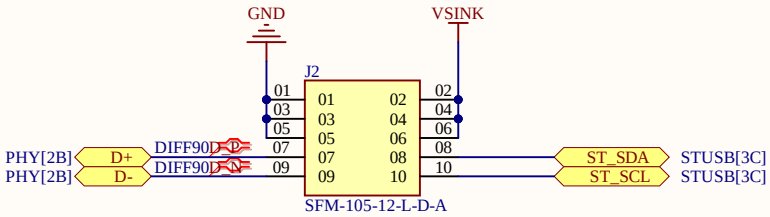

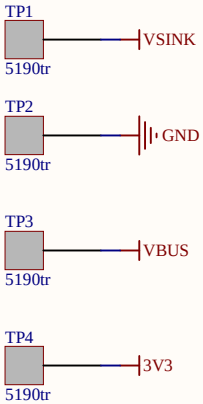

Title		
Size A	Number	Revision
Date: 3/29/2026		Sheet of
File: External-connector.SchDoc		Drawn By: